DRC
PZ25-12000048
05/20/2026

STANDARD DETAIL — FIGURE 101: UTILITY LOCATES

BROWARD COUNTY PUBLIC WORKS DEPARTMENT
WATER & WASTEWATER SERVICES, ENGINEERING DIVISION, 2555 WEST COPANS ROAD, POMPANO BEACH, FL 33069, PHONE NO. 954-831-0745, FAX: 954-831-0925

811 Know what's below. Call before you dig.

1. PRIOR TO BEGINNING ANY WORK, CONTRACTOR SHALL CONTACT ALL UTILITY COMPANIES THAT HAVE FACILITIES WITHIN THE PROJECT AREA.
2. THE ABOVE NOTICE SHALL APPEAR ON THE COVER SHEET OF ALL CONSTRUCTION PLANS SUBMITTED TO THE COUNTY.

REVISED 7/7/2021 — UTILITY LOCATES — FIGURE 101

STANDARD DETAIL — FIGURE 104: UTILITY LOCATIONS

BROWARD COUNTY PUBLIC WORKS DEPARTMENT
WATER & WASTEWATER SERVICES, ENGINEERING DIVISION, 2555 WEST COPANS ROAD, POMPANO BEACH, FL 33069, PHONE NO. 954-831-0745, FAX: 954-831-0925

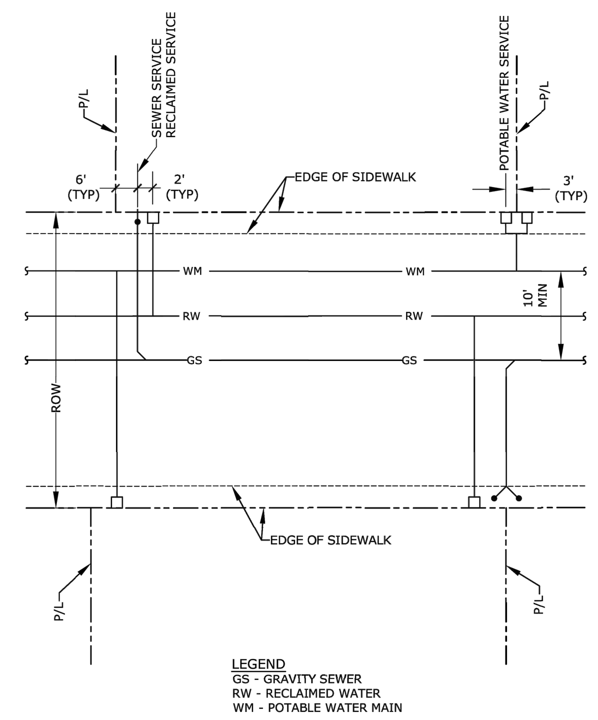

LEGEND
GS - GRAVITY SEWER
RW - RECLAIMED WATER
WM - POTABLE WATER MAIN

NOTE: LOCATION OF SERVICES CAN BE MODIFIED WITH WWS APPROVAL.

REVISED 7/7/2021 — UTILITY LOCATIONS — FIGURE 104

STANDARD DETAIL — FIGURE 105: WATER MAIN SEPARATION

BROWARD COUNTY PUBLIC WORKS DEPARTMENT
WATER & WASTEWATER SERVICES, ENGINEERING DIVISION, 2555 WEST COPANS ROAD, POMPANO BEACH, FL 33069, PHONE NO. 954-831-0745, FAX: 954-831-0925

WATER MAIN SEPARATION IN ACCORDANCE WITH F.A.C. RULE 62-555.314

OTHER PIPE	HORIZONTAL SEPARATION	CROSSINGS (1) (4)	JOINT SPACING @ CROSSINGS (FULL JOINT CENTERED)
STORM SEWER, STORM WATER FORCE MAIN, RECLAIMED WATER (2)	3 ft. minimum	12 inches is the minimum, except for storm sewer, then 6 inches is the minimum and 12 inches is preferred	Alternate 3 ft. minimum
VACUUM SANITARY SEWER	10 ft. preferred 3 ft. minimum	12 inches preferred 6 inches min	Alternate 3 ft. minimum
GRAVITY SANITARY SEWER,(3) SANITARY SEWER FORCE MAIN, RECLAIMED WATER	10 ft. preferred 6 ft. minimum	12 inches is the minimum, except for gravity sewer, then 6 inches is the minimum and 12 inches is preferred	Alternate 6 ft. minimum
ON-SITE SEWAGE TREATMENT & DISPOSAL SYSTEM	10 ft. minimum	—	—

(1) WATER MAIN SHOULD CROSS ABOVE OTHER PIPE. WHEN WATER MAIN MUST BE BELOW OTHER PIPE, THE MINIMUM SEPARATION IS 12 INCHES.
(2) RECLAIMED WATER REGULATED UNDER PART III OF CHAPTER 62-610, F.A.C.
(3) 3 FT. FOR GRAVITY SANITARY SEWER WHERE THE BOTTOM OF THE WATER MAIN IS LAID AT LEAST 6 INCHES ABOVE THE TOP OF THE GRAVITY SANITARY SEWER.
(4) 18" VERTICAL MINIMUM SEPARATION REQUIRED BY WWS, UNLESS OTHERWISE APPROVED.

REVISED 7/7/2021 — WATER MAIN SEPARATION — FIGURE 105

STANDARD DETAIL — FIGURE 106: STANDARD UTILITY CROSSING

BROWARD COUNTY PUBLIC WORKS DEPARTMENT
WATER & WASTEWATER SERVICES, ENGINEERING DIVISION, 2555 WEST COPANS ROAD, POMPANO BEACH, FL 33069, PHONE NO. 954-831-0745, FAX: 954-831-0925

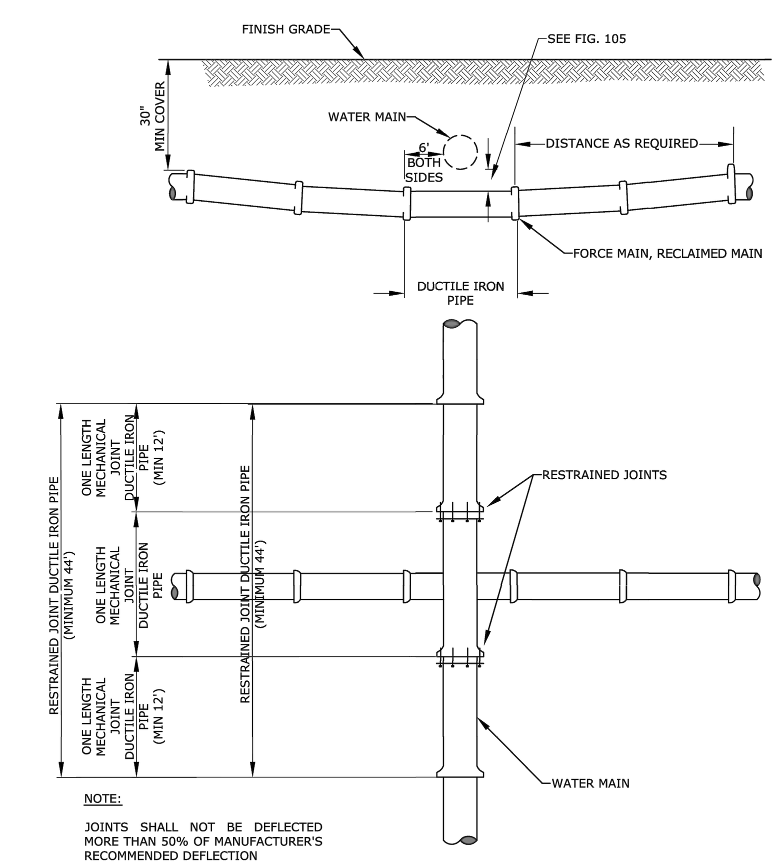

NOTE:
JOINTS SHALL NOT BE DEFLECTED MORE THAN 50% OF MANUFACTURER'S RECOMMENDED DEFLECTION

REVISED 7/7/2021 — STANDARD UTILITY CROSSING — FIGURE 106

STANDARD DETAIL — FIGURE 107: SPECIAL UTILITY CROSSING

BROWARD COUNTY PUBLIC WORKS DEPARTMENT
WATER & WASTEWATER SERVICES, ENGINEERING DIVISION, 2555 WEST COPANS ROAD, POMPANO BEACH, FL 33069, PHONE NO. 954-831-0745, FAX: 954-831-0925

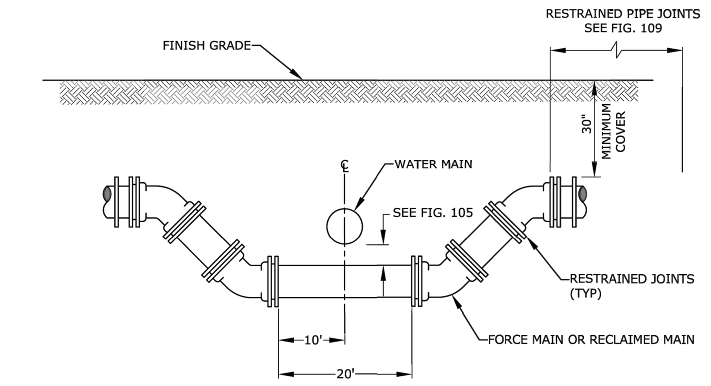

WHEREVER POSSIBLE DEFLECTION OF THE PIPE WILL BE USED TO AVOID EXISTING OBSTRUCTIONS. THIS CROSSING SHALL BE USED ONLY WHEN APPROVED BY WWS.

REVISED 7/7/2021 — SPECIAL UTILITY CROSSING — FIGURE 107

STANDARD DETAIL — FIGURE 109: RESTRAINED JOINT REQUIREMENTS SINGLE FITTING

BROWARD COUNTY PUBLIC WORKS DEPARTMENT
WATER & WASTEWATER SERVICES, ENGINEERING DIVISION, 2555 WEST COPANS ROAD, POMPANO BEACH, FL 33069, PHONE NO. 954-831-0745, FAX: 954-831-0925

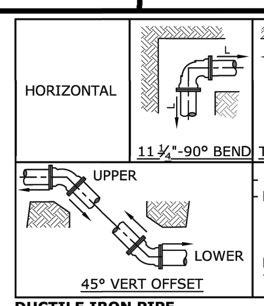

- CROSSES SHALL BE RESTRAINED IN ALL DIRECTIONS.
- FITTINGS AND VALVES NEED TO BE RESTRAINED PER STANDARD DETAILS 109-112, EVEN WHEN THE FITTINGS OR VALVES ARE CUT IN AFTER THE INITIAL PIPE INSTALLATION. ASBESTOS CEMENT PIPE WILL BE REPLACED WITH DUCTILE IRON PIPE AT LEAST THROUGH THE RESTRAINING LENGTH.

DUCTILE IRON PIPE

Diameter	11 ¼°	22 ½°	45°	90°	Tee or Cross	Valves and Dead End	45° VERTICAL OFFSET (FEET) UPPER	LOWER
	HORIZONTAL, L (FEET)							
4	1	2	4	10	7	20	9	4
6	2	3	6	14	15	28	12	5
8	2	4	8	17	23	37	16	7
10	2	5	9	21	30	44	19	8
12	3	5	10	24	38	52	22	9

PVC PIPE

Diameter	11 ¼°	22 ½°	45°	90°	Tee or Cross	Valves and Dead End	45° VERTICAL OFFSET (FEET) UPPER	LOWER
	HORIZONTAL, L (FEET)							
4	2	3	5	12	11	32	14	5
6	2	4	7	16	23	45	19	6
8	3	5	9	21	37	59	25	8
10	3	5	11	25	48	71	30	9
12	3	6	12	29	61	83	35	11

THE NOTED REQUIREMENTS WERE CALCULATED IN ACCORDANCE WITH THRUST RESTRAINT CALCULATOR V7.2 BY EBAA IRON WITH THE FOLLOWING ASSUMPTIONS:
SOIL CONDITIONS: SW OR GW; NOMINAL SIZE EQUALS BRANCH SIZE; LENGTH ALONG RUN EQUALS 4 FEET
LAYING CONDITION: 4, SAND BEDDING, BACKFILL COMPACTED > 80%; VERTICAL LOW SIDE DEPTH EQUALS 3.5 FEET
MINIMUM COVER: 3.0 FT SAFETY FACTOR: 1.5 BARE PIPE (NO POLY WRAP)
IF FIELD CONDITIONS DIFFER FROM THE ABOVE, CONTRACTOR SHALL NOTIFY WWS.
FOR PIPE LARGER THAN INCLUDED IN THE ABOVE TABLES, ENGINEER OF RECORD SHALL SUBMIT CALCULATIONS FOR EACH JOINT REQUIRING RESTRAINT.

SINGLE FITTING RESTRAINED JOINT
150 PSI TEST PRESSURE

REVISED 7/7/2021 — RESTRAINED JOINT REQUIREMENTS SINGLE FITTING — FIGURE 109

STANDARD DETAIL — FIGURE 112: RESTRAINED JOINT REQUIREMENTS REDUCING FITTINGS

BROWARD COUNTY PUBLIC WORKS DEPARTMENT
WATER & WASTEWATER SERVICES, ENGINEERING DIVISION, 2555 WEST COPANS ROAD, POMPANO BEACH, FL 33069, PHONE NO. 954-831-0745, FAX: 954-831-0925

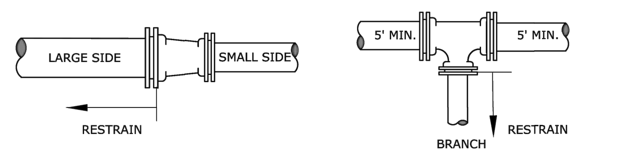

STRAIGHT REDUCER (SMALL SIDE)

DUCTILE IRON PIPE

DIAMETER	6"	8"	10"	12"
4"	15'	27'	36'	45'
6"		16'	27'	38'
8"			15'	28'
10"				16'

PVC PIPE

DIAMETER	6"	8"	10"	12"
4"	24'	43'	58'	72'
6"		25'	44'	61'
8"			24'	44'
10"				25'

TEE REDUCER (BRANCH SIZE)

DUCTILE IRON PIPE

DIAMETER	6"	8"	10"	12"
4"	1'	1'	1'	1'
6"		6'	1'	1'
8"			15'	10'
10"				23'

PVC PIPE

DIAMETER	6"	8"	10"	12"
4"	1'	1'	1'	1'
6"		16'	8'	1'
8"			31'	25'
10"				44'

THE NOTED REQUIREMENTS WERE CALCULATED IN ACCORDANCE WITH THRUST RESTRAINT CALCULATOR V7.2 BY EBAA IRON WITH THE FOLLOWING ASSUMPTIONS:
SOIL CONDITIONS: SW OR GW; LENGTH ALONG RUN EQUALS 4 FEET
LAYING CONDITION: 4, SAND BEDDING, BACKFILL COMPACTED > 80%
MINIMUM COVER: 3.0 FT;SAFETY FACTOR: 1.5;BARE PIPE (NO POLY WRAP)
IF FIELD CONDITIONS DIFFER FROM THE ABOVE, CONTRACTOR SHALL NOTIFY WWS.
FOR PIPE LARGER THAN INCLUDED IN THE ABOVE TABLES, ENGINEER OF RECORD SHALL SUBMIT CALCULATIONS FOR EACH JOINT REQUIRING RESTRAINT.

RESTRAINED REDUCING FITTING
150 PSI TEST PRESSURE

REVISED 7/7/2021 — RESTRAINED JOINT REQUIREMENTS REDUCING FITTINGS — FIGURE 112

STANDARD DETAIL — FIGURE 121: VALVE COLLAR AND IDENTIFICATION MARKER

BROWARD COUNTY PUBLIC WORKS DEPARTMENT
PLOTTED: 10/2024
WATER & WASTEWATER SERVICES, ENGINEERING DIVISION, 2555 WEST COPANS ROAD, POMPANO BEACH, FL 33069, PHONE NO. 954-831-0745, FAX: 954-831-0925

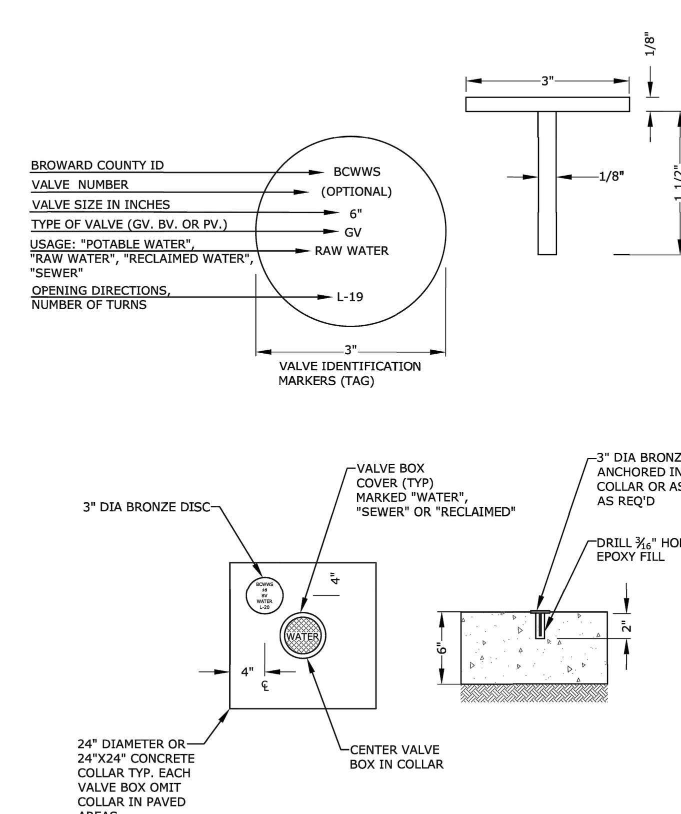

REVISED 7/7/2021 — VALVE COLLAR AND IDENTIFICATION MARKER — FIGURE 121

STANDARD DETAIL — FIGURE 123: VALVE BOX DETAIL

BROWARD COUNTY PUBLIC WORKS DEPARTMENT
WATER & WASTEWATER SERVICES, ENGINEERING DIVISION, 2555 WEST COPANS ROAD, POMPANO BEACH, FL 33069, PHONE NO. 954-831-0745, FAX: 954-831-0925

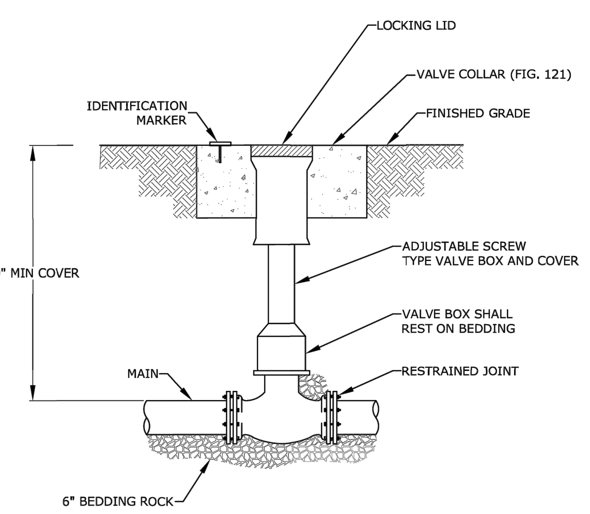

1. WHEN VALVE IS NOT LOCATED IN PAVEMENT, PLACE A WHITE REFLECTIVE RAISED PAVEMENT MARKER IN THE DRIVE LANE, ADJACENT TO THE VALVE.
2. OPERATOR EXTENSION SHAFT SHALL BE PROVIDED WHEN OPERATING NUT IS MORE THAN 24" BELOW TOP OF VALVE BOX.
3. PVC PIPE OR DUCTILE IRON PIPE IS NOT ACCEPTABLE FOR VALVE BOX RISER.

REVISED 7/7/2021 — VALVE BOX DETAIL — FIGURE 123

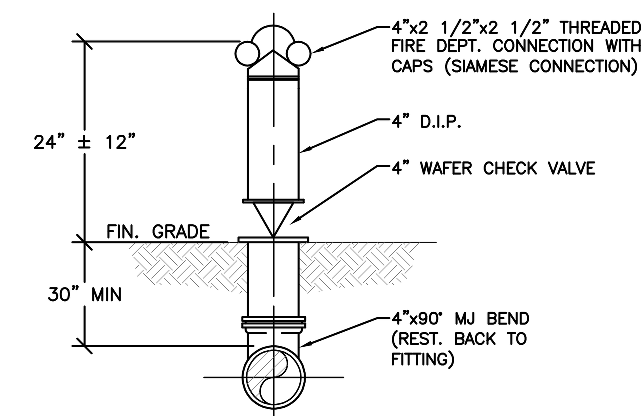

FIRE DEPARTMENT CONNECTION
N.T.S.

BCWWS PROJ. NO. ______ - DWG NO. ____-__-___

HOLLAND ENGINEERING
CIVIL ENGINEERING SOLUTIONS
301 SW 7th Street
Fort Lauderdale, Florida 33315
Phone: 954.367.0371
Certificate of Authorization 7325

SUSAN C. HOLLAND
STATE OF FLORIDA PROFESSIONAL ENGINEER
LICENSE No. 41831

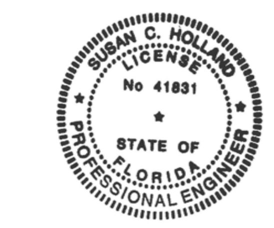

This item has been digitally signed & sealed by Susan C. Holland, P.E. Printed copies of this document are not considered signed and sealed and the signature must be verified on any electronic copies.

Susan C Holland — Digitally signed by Susan C Holland Date: 2026.03.13 10:13:44 -04'00'

WAREHOUSE ADDITION
FOR
POMPANO 1150 LLC
1150 SW 30TH AVE
POMPANO BEACH, FL 33069

REVISIONS

NO.	DATE	BY	CHK'D	DESCRIPTION
1	2/11/26	HS	SCH	DRC COMMENTS

DRAWN BY: HS
CHECKED BY: SCH
DATE: 09/04/25
SCALE: N.T.S.

SHEET TITLE
UTILITY DETAILS

NO. OF SHEETS: 8
SHEET NO.: C-6
PROJECT NO. 25-21